DRG NO.	REV	SHEET 1 / 1
M040207	A	

THIRD ANGLE PROJECTION

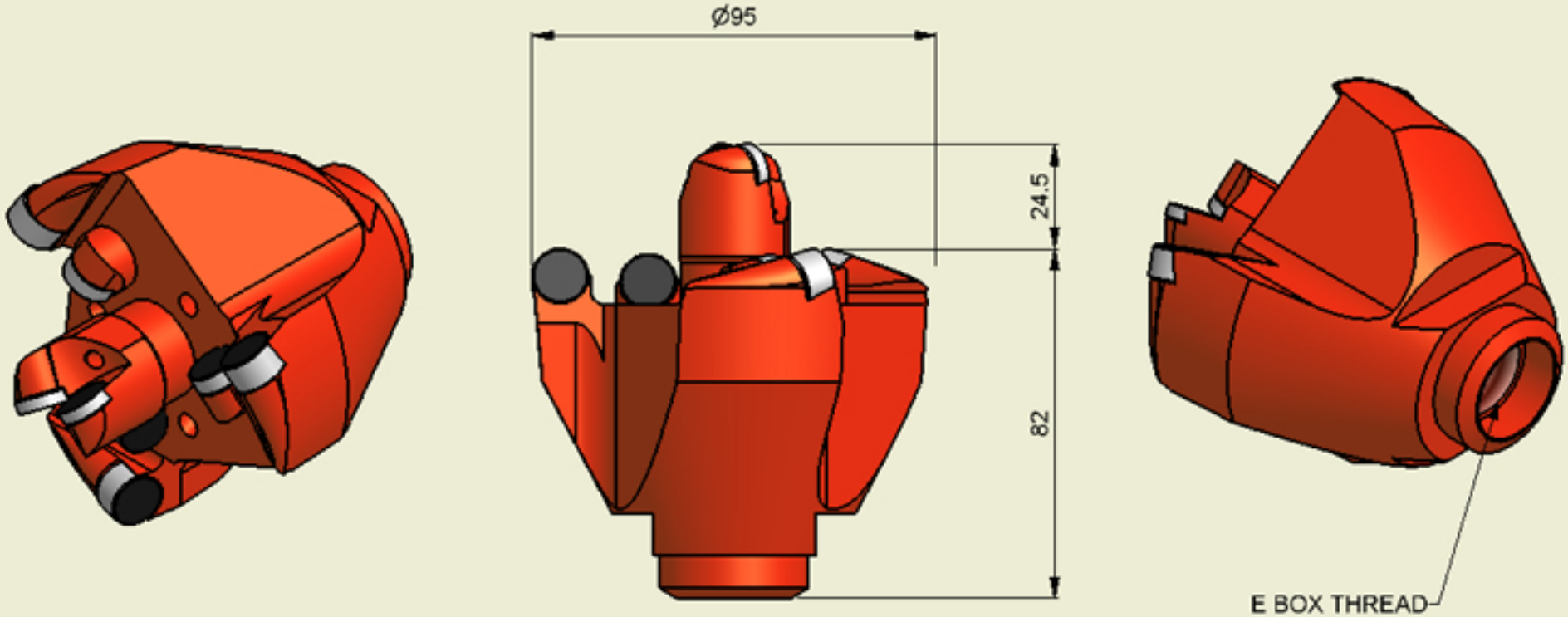

Parts List			
ITEM	QTY	PART NUMBER	DESCRIPTION
1	1	M040209	28mm PCD Pilot Bit - M20 Pin
2	1	M040208	95mm PCD Hole Opener - E Box

THIS DRAWING REMAINS THE PROPERTY OF MINNOVATION LIMITED AND MUST NOT BE REPRODUCED, COPIED OR SHARED WITH A THIRD PARTY WITHOUT THE WRITTEN PERMISSION OF THE OWNER

© MINNOVATION LIMITED

SHEET 1 / 1

REV	REV BY	DATE	REV NO.	REV	REV BY	DATE	REV NO.	REV	REV BY	DATE	REV NO.
A	RP	29/04/2005	First Issue								

TITLE

95mm PCD HOLE OPENER & PILOT BIT

DRAWN BY	RP	CHKD BY	
DATE	29/04/2005	DATE	

MINNOVATION LTD

DO NOT SCALE DRAWING IF IN DOUBT ASK

DRG NO.	REV
M040207	A